Solar Remote Monitor and Controller

The Remote Monitor and Controller (RMC) provides an integrated solution for monitoring and controlling any electrical or electronic device by means of remote communications using SMS and GPRS.

The Solar Remote Monitor and Controller (SRMC) is an RMC configured with solar irradiation sensors, temperature sensors, voltage and current sensors specifically for monitoring and controlliing renewable energy systems such as photovoltaic systems, solar/electric geysers and wind turbine generators.

A Global Positioning System (GPS) module, various meterological sensors and various communication technologies are optional.

Architecture

The SRMC incorporates a Global System for Mobile Communication (GSM) module, autonomous data logging to onboard non-volatile memory, digital/analogue input and digital output, real-time clock and watcdog protection. All SRMC functions can be accessed using an Application Program Interface (API).

A suite of sensors provides to the SRMC, after which the onboard microcontroller receives the resulting digital data, performs various calaculations and transmit the data to a central collection point or to any other enabled device such as data server, personal computer cellular telephone.

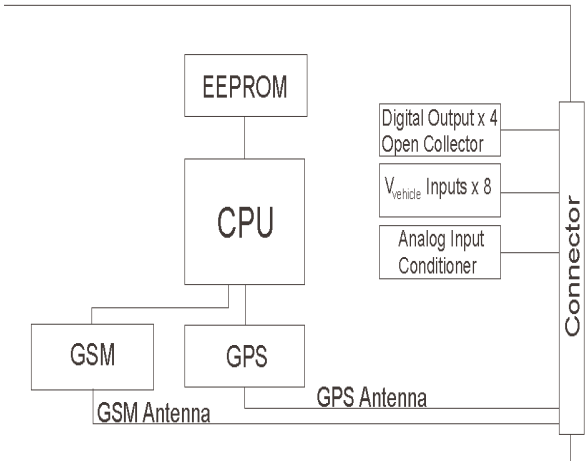

RMC Architecture

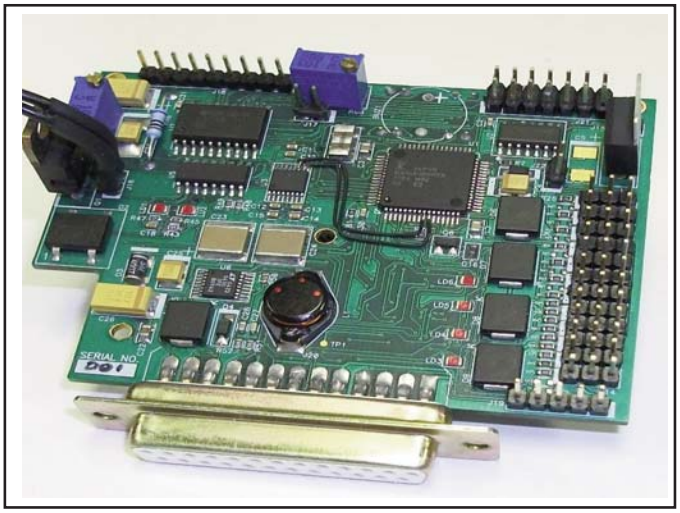

Remote Monitor and Controller

Features

- GSM V2.5 (GPRS with built-in TCP/IP stack, SMS and CSD communication options)
- up to 4 Mbit of EEPROM for the logging user or onboard data
- software determination of instantaneous, average and power usage or generation
- software determination of average and aggreated energy generation (grid export)
- a powerful API providing flexible access to all onboard monitoring and control functions
- sophisticated reporting functions

Applications

- photovoltaic monitoring and control
- wind turbine generator monitoring and control
- electric and solar geyser monitoring and control
- diesel/electric generator monitoring and control
- UPS monitoring and control
- remote data logging using GPRS/SMS/CSD
- remote control using GPRS/SMS/CSD
- stand-alone data logging and control
- easy to use GSM (GPRS/SMS/CSD) communications

Solar Remote Monitor and Controller

Specifications	
Serial Interface	RS232-compatible asynchronous transfer with modem control signals
GSM Module	GPRS, SMS and CSD
GSM Data Format	Serial API
EEPROM	8 kbit for event and data logging (up to 4 Mbit optional)
Solar Irradiation Sensor	1
Temperature Sensors	2
DC Current Sensor	1
DC Voltage Sensor	1
AC Current Sensors	2
Other Analogue Inputs	7
Digital Inputs	8
Digital Outputs	4
Local Alarm Output (Buzzer)	1
Dimensions	100 mm x 80 mm x 30 mm
Power Requirements	6,6 V to 24 V; 24 W
MTBF	> 130 000 hours (MIL-HDBK-217F, Ground Benign)
MTTR	< 30 minutes
Supporting Software	Sample serial API user application software (C/C++ source code)

Options	
WeatherSensors	Wind Speed, Wind Direction, Barometric Pressure, Ambient Temperature, Relative Humidity, Rainfall, Ultra-Violet Radiation, Soil Wetness, Leaf Wetness, Water Salinity
Positioning, Tracking	GPS, DGPS
Communications	Ethernet (10, 100, 1000, 10G), Wi-Fi (802.11), Bluetooth

Environmental Specifications	
Temperature **- Operating** **- Storage**	 -20 C to +70 C -40 C to +85 C
Humidity	0% - 90%
Vibration **- Sine** **- Random**	 2 g (peak) 10 Hz to 100 Hz 0,04 g²/Hz at 15 Hz to 2 kHz